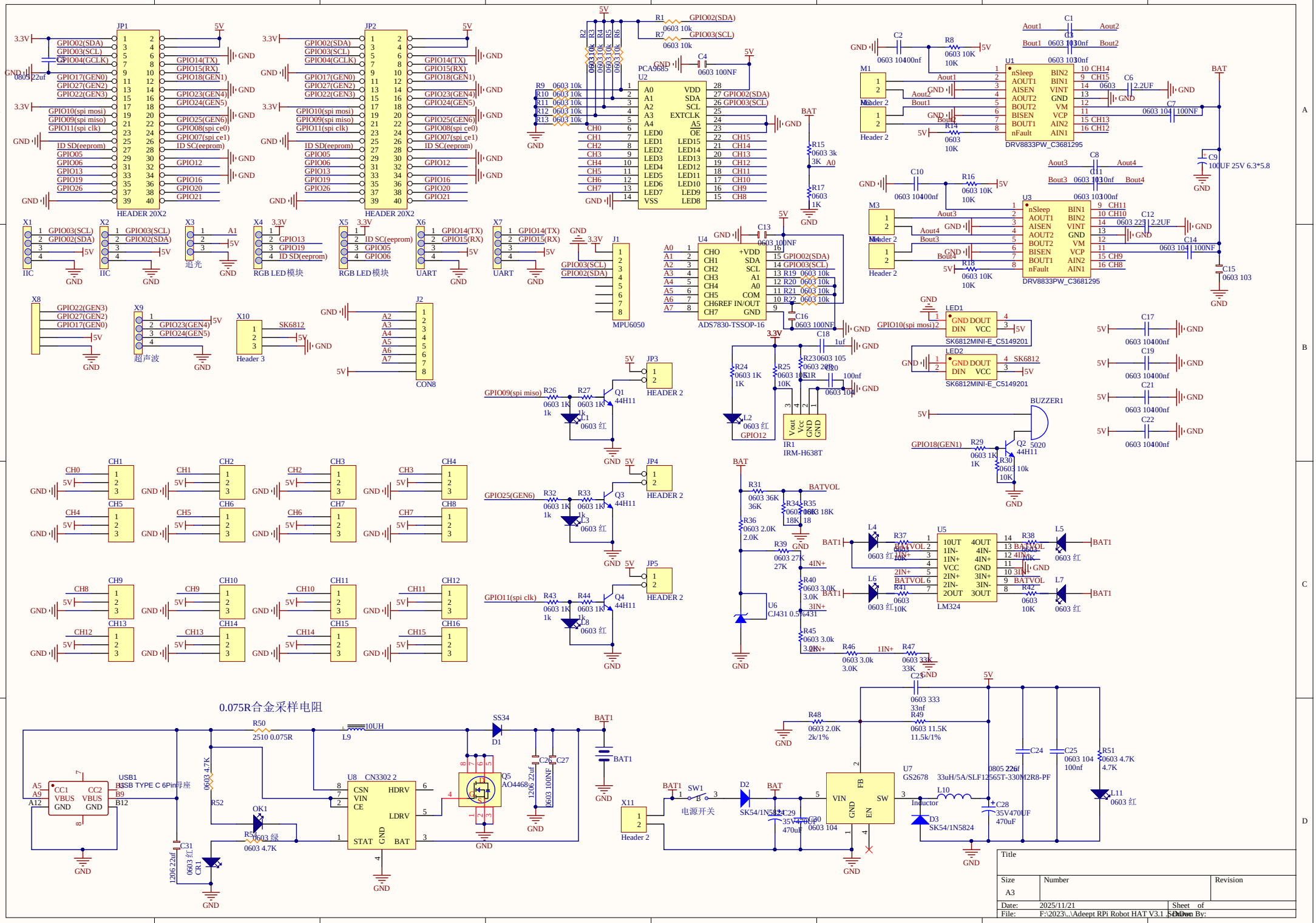

JP1
HEADER 20X2
JP2
HEADER 20X2
PCA9685
U2
U1
DRV8833PW_C3681295
U3
DRV8833PW_C3681295
M1
M2
M3
M4
Header 2
X1
IIC
X2
IIC
X3
追光
X4
RGB LED模块
X5
RGB LED模块
X6
UART
X7
UART
J1
MPU6050
U4
ADS7830-TSSOP-16
X8
X9
超声波
X10
Header 3
J2
CON8
LED1
SK6812MINI-E_C5149201
LED2
SK6812MINI-E_C5149201
BUZZER1
5020
IR1
IRM-H638T
JP3
JP4
JP5
HEADER 2
Q1
Q2
Q3
Q4
44H11
U5
LM324
U6
CJ431 0.5%431
0.075R合金采样电阻
USB1
USB TYPE C 6Pin母座
U8
CN3302 2
Q5
AO4468
X11
Header 2
SW1
电源开关
D2
SK54/1N5824
U7
GS2678
33uH/5A/SLF12565T-330M2R8-PF
D3
SK54/1N5824
Title
Size
A3
Number
Revision
Date: 2025/11/21
Sheet of
File: F:\2023\..\Adeept RPi Robot HAT V3.1 .SchDoc
Drawn By: